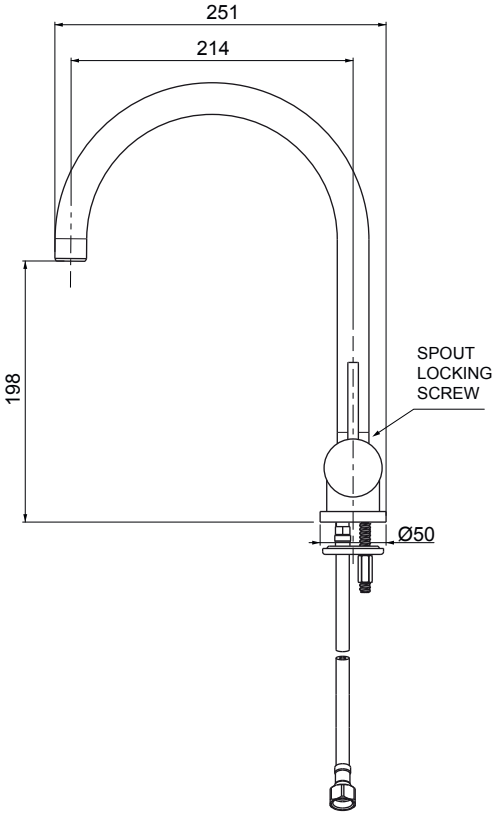
251
214
198
SPOUT
LOCKING
SCREW
Ø50

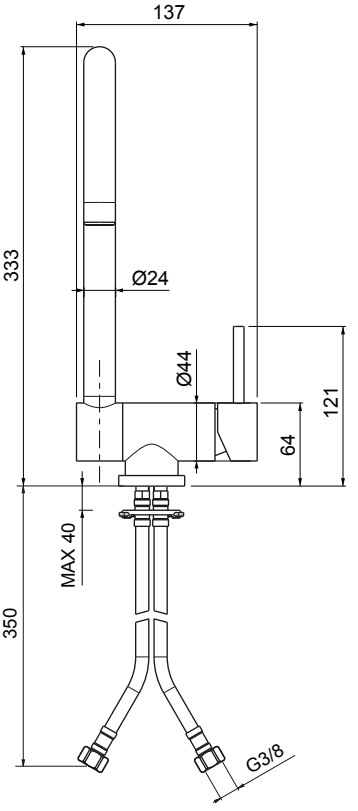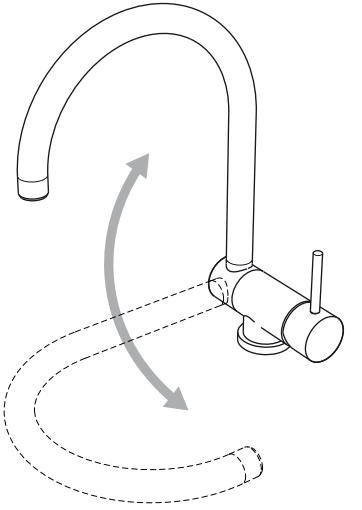
137
333
Ø24
Ø44
121
64
MAX 40
350
G3/8